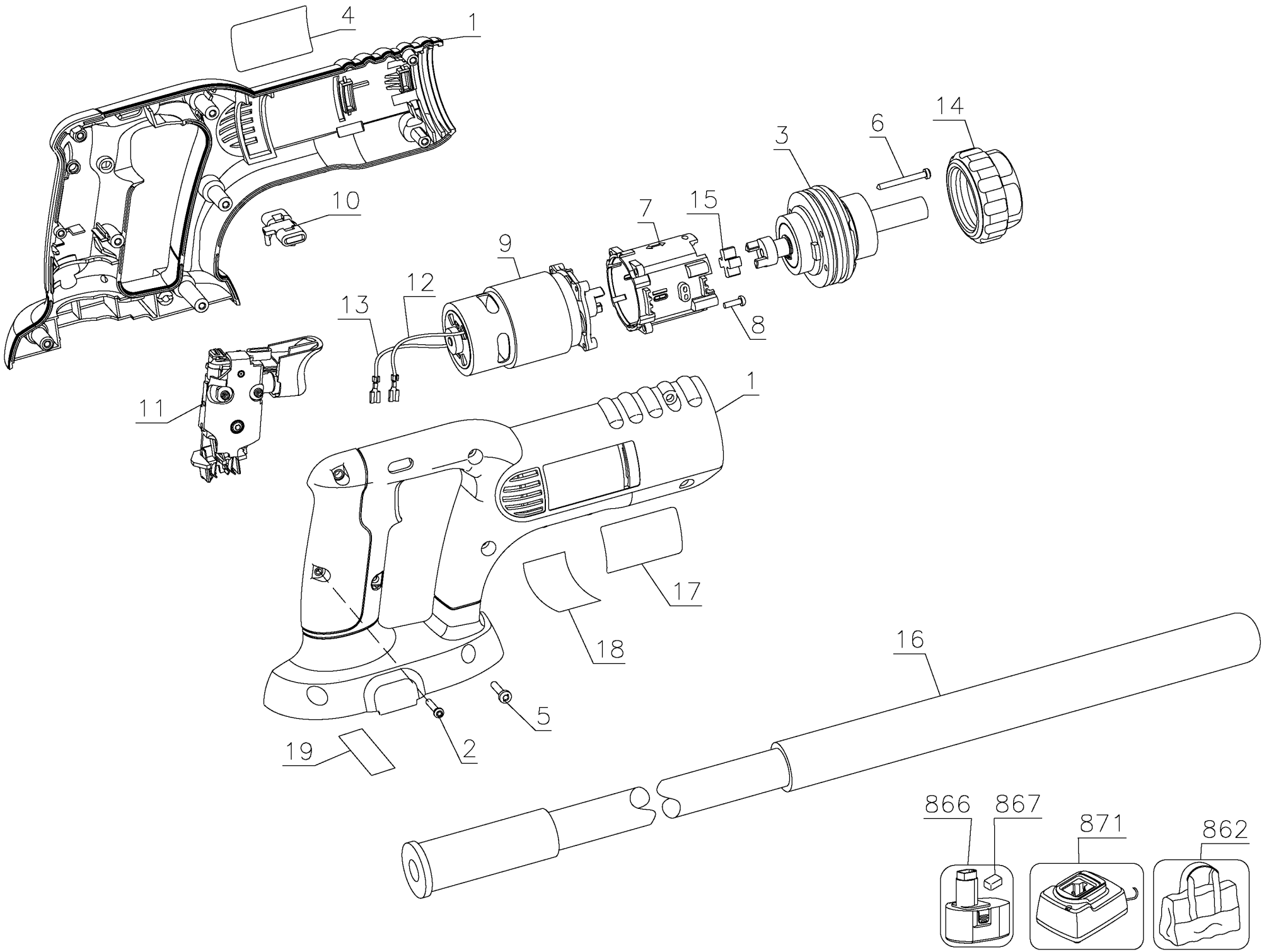
4
1
14
6
3
15
7
10
9
12
13
8
11
1
17
18
16
5
2
19
866
867
871
862

Parts List for DC530KA Type 1

Item Number	Part Number	Description	Qty Required
1	623778-00	CLAMSHELL SET	1
2	682211-00	SCREW,TORX	1
3	629582-00	BEARING HOUSING	1
4	395657-00	ID LABEL	1
5	330019-04	SCREW,PLASTITE	8
6	330019-39	SCREW	4
7	798701-00	CASE,GEAR	1
8	98091-10	SCREW	4
9	630369-00	MOTOR ASSEMBLY	1
10	607100-00	LOCK-OFF BUTTON	1
11	152274-15	SWITCH,VSR	1
12	631468-00	LEADWIRE ASSY.	1
13	632769-00	LEADWIRE ASSY.	1
14	629580-00	COLLAR NUT	1
15	631319-00	SPIDER	1
16	DC5301	FLEX SHAFT	1
16	631433-00	VIBRATOR	1
17	632190-00	NAMEPLATE	1
18	625598-00	WARNING LABEL	1
19	625912-00	WARNING LABEL	1
862	632191-00	CARRY BAG	1
866	DC9096	BATTERY PACK	2
867	645221-00	BATTERY CAP	2
871	388683-12	1 HOUR CHARGER	1

COPYRIGHT© 2005. All Rights Reserved.
Parts list, pricing, and availability subject to change. Please visit www.dewaltservicenet.com for current parts information.